TEAR SHEET

Barton Large Bath Sconce
Item # RL 2033PN-EC

Designer: Ralph Lauren

Height: 24"
Width: 2.75"
Extension: 4"
Backplate: 2.5" x 20.75" Rectangle
Finishes: BZ, NB, PN
Glass Options: EC
Lightsource: Dedicated LED
Wattage: 24w (2600lm)
Weight: 14 Pounds
Note: Requires Smaller Outlet Box

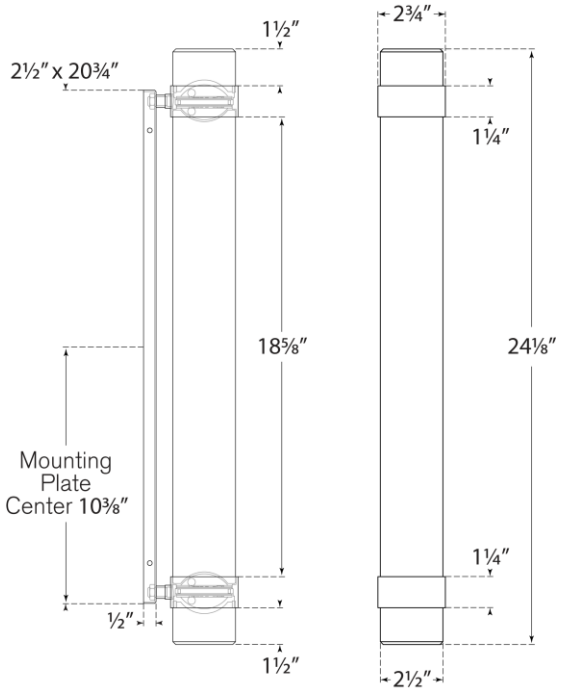

VISUAL COMFORT & CO.

DAMP LED