TEAR SHEET

Cody Medium Hanging Shade

Item # RL 5533NB/SDL-L/SDL

Designer: Ralph Lauren

O/A Height: 41.5"
Fixture Height: 17.25"
Min. Custom Height: 22"
Width: 24"
Canopy: 6.5" Round
Finishes: NB/NVY, NB/SDL, PN/CHC
Shade Treatments: L
Shade Details: 22.5" x 24" x 12"
Socket: 3 - E26 Keyless
Wattage: 3 - 60 A19
Weight: 15 Pounds

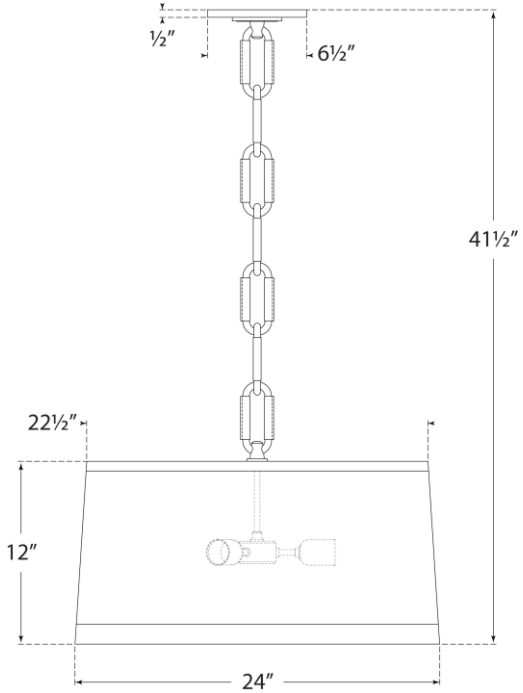

VISUAL COMFORT & CO.